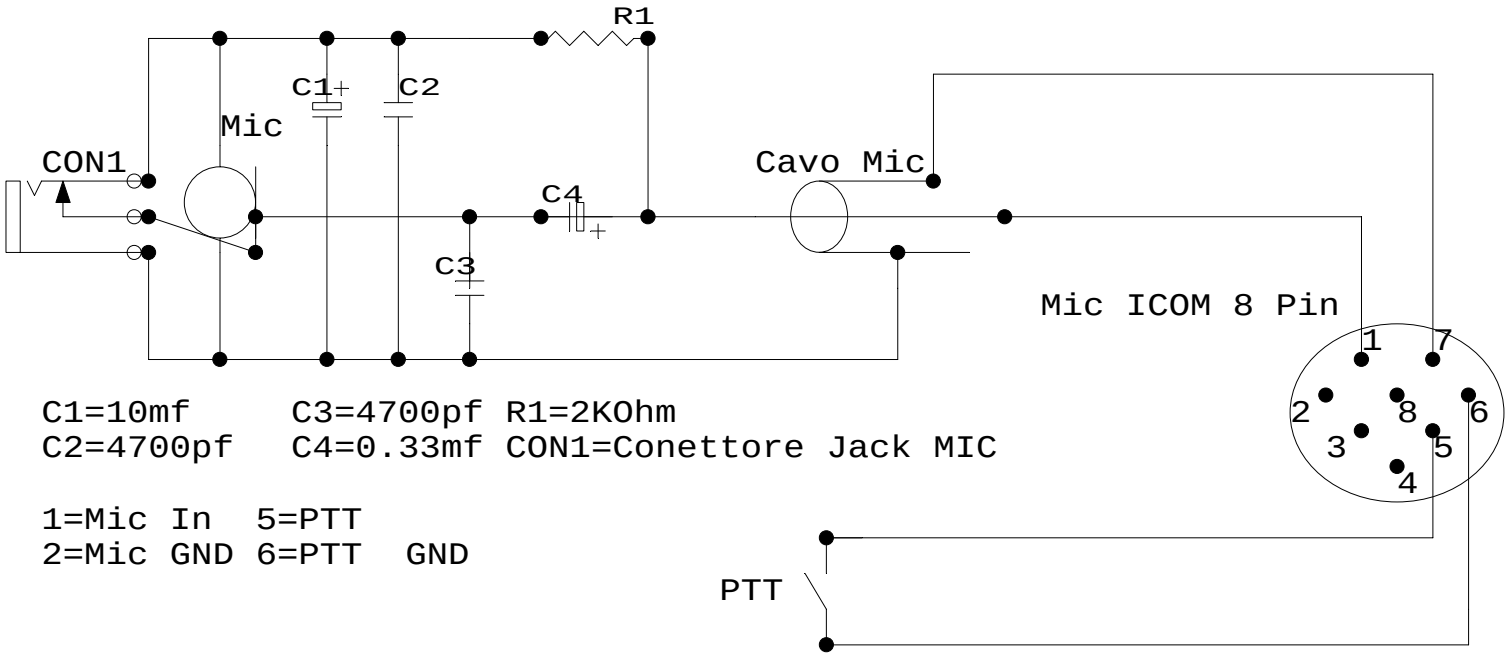

C1=10mf C3=4700pf R1=2KOhm
C2=4700pf C4=0.33mf CON1=Conettore Jack MIC

1=Mic In 5=PTT
2=Mic GND 6=PTT GND

Interfaccia Cuffia/mic per Rtx ICOM by IW1QN